VTIN28/30-STP

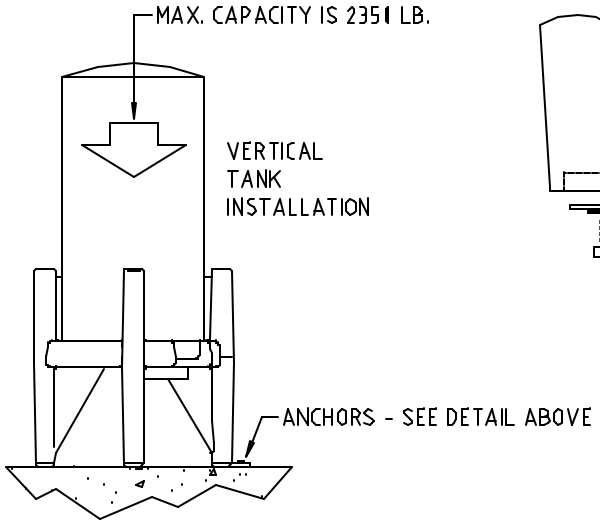

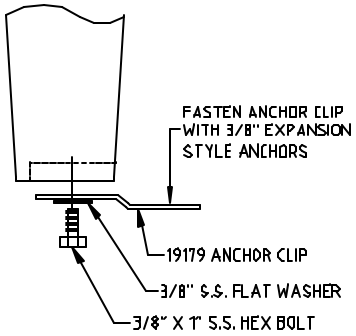

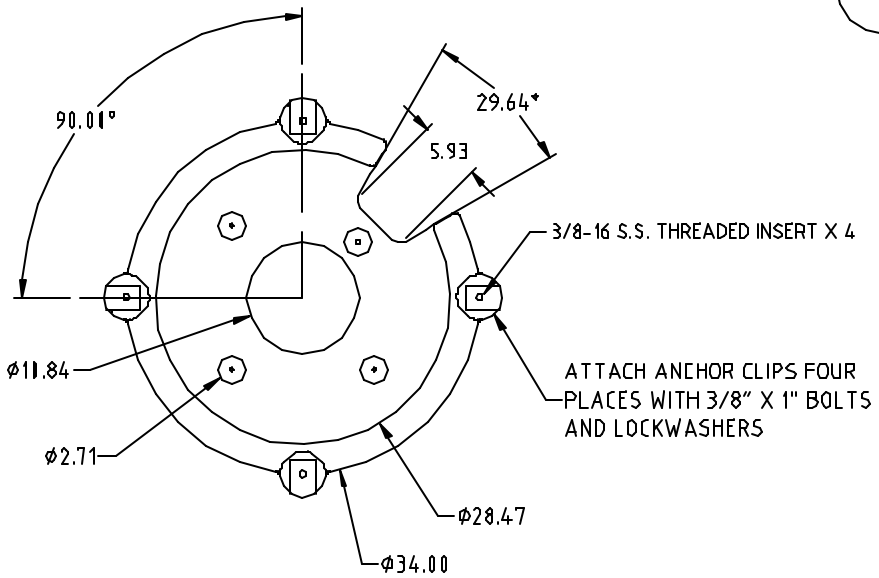

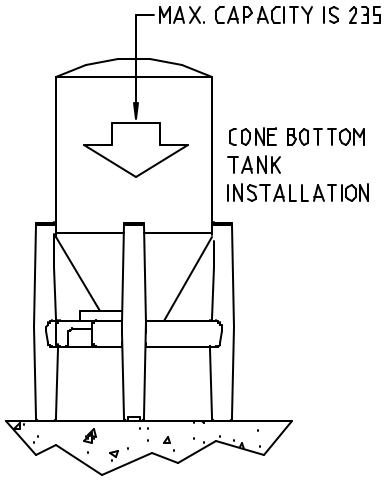

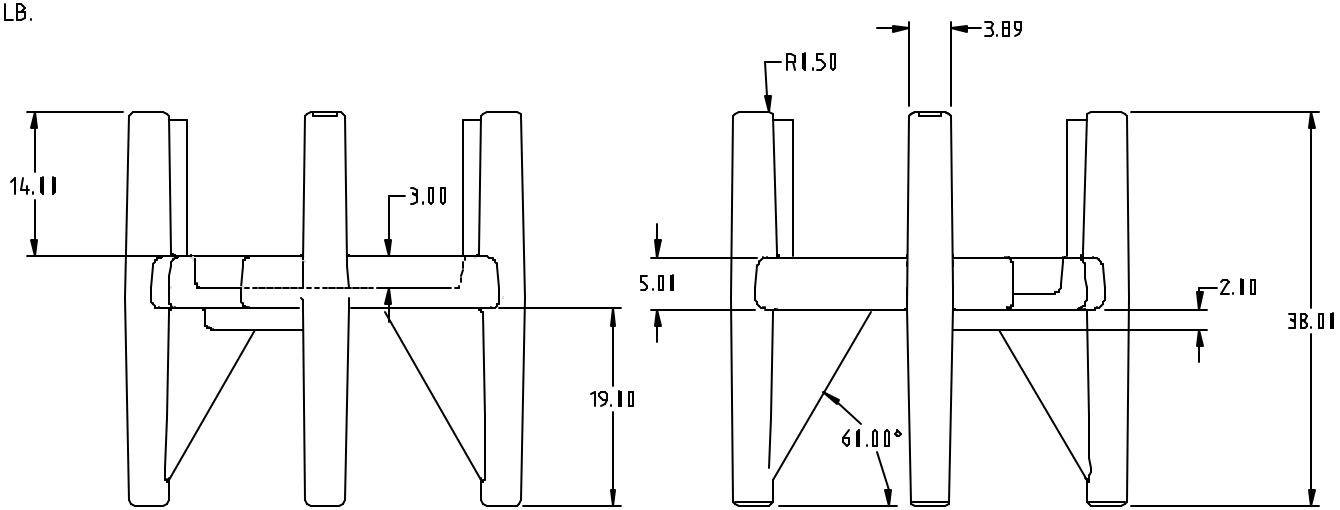

Printed from: www.chappellsupplyoftexas.com
Chappell Supply of Texas
548 S. Saginaw Blvd Saginaw, TX 76179
1-817-439-2200

REV	DESCRIPTION	DATE	APPRD

DRAWN / DATE: REH/2/28/13

APPRD. / DATE: REH/2/28/13

MATERIAL / SHOT WEIGHT: 8461 — 45

Ace Roto-Mold
A DIVISION OF DEN HARTOG INDUSTRIES, INC.

CLIENT / DESCRIPTION: CONVERTABLE POLY STAND

SCALE: N.S.

PART NO.: VTIN28/30-STP

ALL DIMENSIONS ARE IN DECIMAL INCHES
TOLERANCES UNLESS OTHERWISE SPECIFIED
± .5% @ 68° F

THIRD ANGLE PROJECTION
ANSI 14.5M

NOTES:
1. .188 NOMINAL WALL