GP CENTRIFUGALS

GP CENTRIFUGALS

GENERAL PUMP *A member of the Interpump Group*

SGC Series–3/4 / 1 hp

Self-priming, deep well, cast iron centrifugal water pumps with 4" external ejector

FEATURES

- Heavy duty cast-iron construction
- Balanced brass impeller and plastic diffuser
- Efficient graphite and ceramic mechanical seal
- Buna-N elastomers for exceptional compatibilty
- Large NPT-F ports
- Priming port

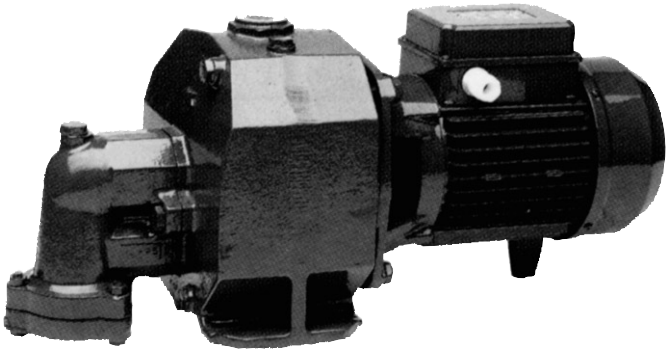

SPECIFICATIONS

Part Number	Inlet	Outlet	Impeller	Horse Power	RPM	Volts	Max psi	Max Temp °F(°C)	Mechanical Seal	Impeller Material	Body Material
SGC1200711	1.25"	1"	4 5/16"	3/4 HP	3450	110	125	122(50)	Graphite / Ceramic	Brass / Plastic Diffuser	Cast Iron
SGC1201011	1.25"	1"	4 5/16"	1.0 HP	3450	110	125	122(50)	Graphite / Ceramic	Brass / Plastic Diffuser	Cast Iron

			Feet of Head							
			82	**92**	**98**	**105**	**115**	**121**	**131**	**138**
SGC1200711	Suction Depth (HS)	**30**	7.4	6.0	4.8					
		39		5.3	4.5	3.1				
		49			4.2	2.2	1.2			
SGC1201011		**30**			7.5	6.3	4.3			
		39				6.2	4.5	4.2	2.1	
		49					4.4	4.1	2.2	0.6
		59							2.0	0.6
		69								0.6
			Capacity (gpm)							

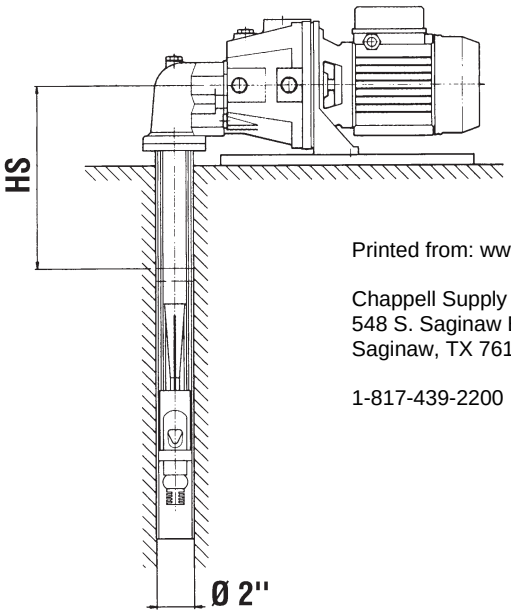

Printed from: www.chappellsupplyoftexas.com

Chappell Supply of Texas
548 S. Saginaw Blvd
Saginaw, TX 76179

1-817-439-2200

GENERAL PUMP

SGC Series–3/4 / 1 hp

GENERAL PUMP *A member of the Interpump Group*

Self-priming, deep well, cast iron centrifugal water pumps with 4" external ejector

PARTS LIST

Item	Part No.	Description	Qty
5.	W51060032	Pump Body, Cast Iron	1
8.	W81100090	Plug, Brass, SGC1200711	1
	W81100146	Plug, Brass, SGC1201011	
9.	W57540040	Gasket, Aluminum	1
10.	W57410800	Impeller Nut, Brass	1
12.	W51300043	Impeller, Plastic, SGC1200711	1
	W51300063	Impeller, Plastic, SGC1201011	
13.	W54250080	Rotating Mechanical Seal, Graphite	1
14.	W54730540	O-Ring	1
14a.	Inquire	O-Ring	1
15.	W54200080	Fixed Mechanical Seal, Ceramic	1
17.	W54300060	Deflector	1
18.	W53200040	Flange, Cast Iron	1
19.	W57002061	Screw	4
20.	W53400100	Bearing	2
22.	W50100700	Pump & Motor Shaft, SGC1200711	1
	W50100800	Pump & Motor Shaft, SGC1201011	
24.	W56800060	Circlip	1
25.	W50000519	Motor Casing w/ Stator, SGC1200711	1
	W50000963	Motor Casing w/ Stator, SGC1201011	
27.	W57100321	Tie-Rod	4
29.	W55120050	Terminal Board Cover	1
30.	W55100305	Terminal Board, SGC1200711	1
	W55100060	Terminal Board, SGC1201011	
31.	W55170200	Strain Relief	1
32.	W53220040	Rear Motor Cover	1
33.	W55000060	Motor Fan, Plastic	1
35.	W55050065	Fan Cover	1

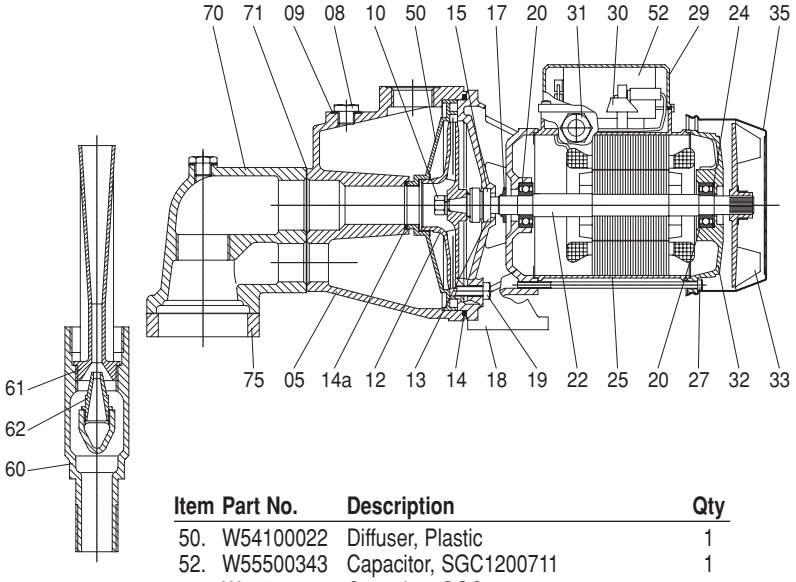

Item	Part No.	Description	Qty
50.	W54100022	Diffuser, Plastic	1
52.	W55500343	Capacitor, SGC1200711	1
	W55500384	Capacitor, SGC1201011	
60.	Inquire	Ejector Body, Cast Iron	1
61.	W54110160	Venturi Pipe, Plastic	1
62.	W54120160	Ejector Nozzle, Plastic	1
70.	Inquire	Inlet	1
71.	Inquire	Gasket	1
72.	Inquire	Flanges	1

DIMENSIONS

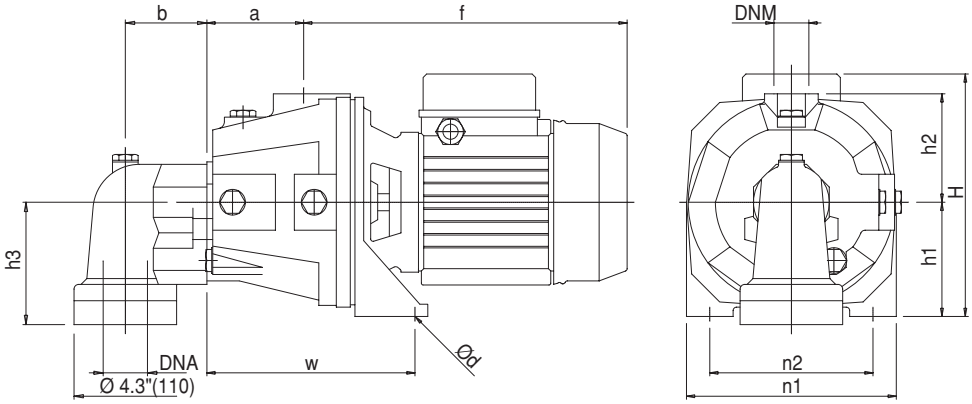

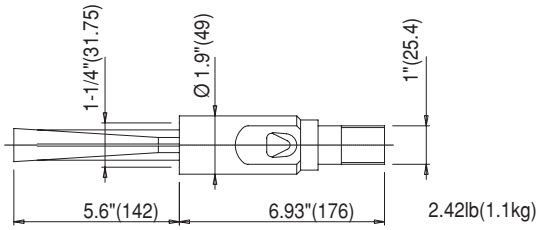

Printed from: www.chappellsupplyoftexas.com

Chappell Supply of Texas
548 S. Saginaw Blvd
Saginaw, TX 76179

1-817-439-2200

in (mm)	DNA	DNM	f	a	b	n1	n2	H	h1	h2	h3	w	Ød	lb(kg)
SGC1200711	1.25	1	10.9 (277)	3.3 (83)	2.8 (70)	7.1 (180)	5.5 (140)	8.1 (207)	3.9 (98)	3.7 (93)	4.1 (105)	7.0 (179)	0.4 (9)	37.9 (17)
SGC1201011	1.25	1	10.9 (277)	3.3 (83)	2.8 (70)	7.1 (180)	5.5 (140)	8.1 (207)	3.9 (98)	3.7 (93)	4.1 (105)	7.0 (179)	0.4 (9)	40.6 (18)

GENERAL PUMP 1174 NORTHLAND DRIVE • MENDOTA HEIGHTS, MN 55120
PHONE: (651)454-6500 • FAX: (651)454-4524 • e-mail: sales@gpcompanies.com • www.generalpump.com

300368 Rev. A
7-02

GENERAL PUMP