GENERAL PUMP *A member of the Interpump Group*

AT Series 76

Triplex Plunger Pump, Splined Shaft

FEATURES

- The industry's choice for high-flow applications
- Forged brass manifold with an exclusive lifetime warranty
- Large-capacity, die-cast, anodized aluminum oil-bath crankcase
- Over-sized connecting rods for maximum life
- Heavy-duty tapered roller bearing.
- Solid ceramic plungers with continuously lubricated packings
- Unitized stainless steel inlet and discharge valves

SPECIFICATIONS

Pump Model	AT0088
Maximum Volume	22.48 GPM
Maximum Discharge Pressure	870 PSI
Maximum Pump Speed	650 RPM
Maximum Inlet Pressure	125 PSI
Bore	1.771 in. / 45 mm
Stroke (in./mm)	1.102 / 28
Crankcase Oil Capacity	61 oz.
Maximum Fluid Temperature	165°F
Inlet Port Thread	1-11 BSPP-F
Discharge Port Thread	3/4-14 BSPP-F
Shaft Diameter	1-3/8" ASAE splined
Weight	60 lbs.
Dimensions	15.6 x 14.0 x 9.5 in.

Printed from:

www.chappellsupplyoftexas.com

Chappell Supply of Texas
548 S. Saginaw Blvd
Saginaw, TX 76179

1-817-439-2200

DIMENSIONAL DRAWING

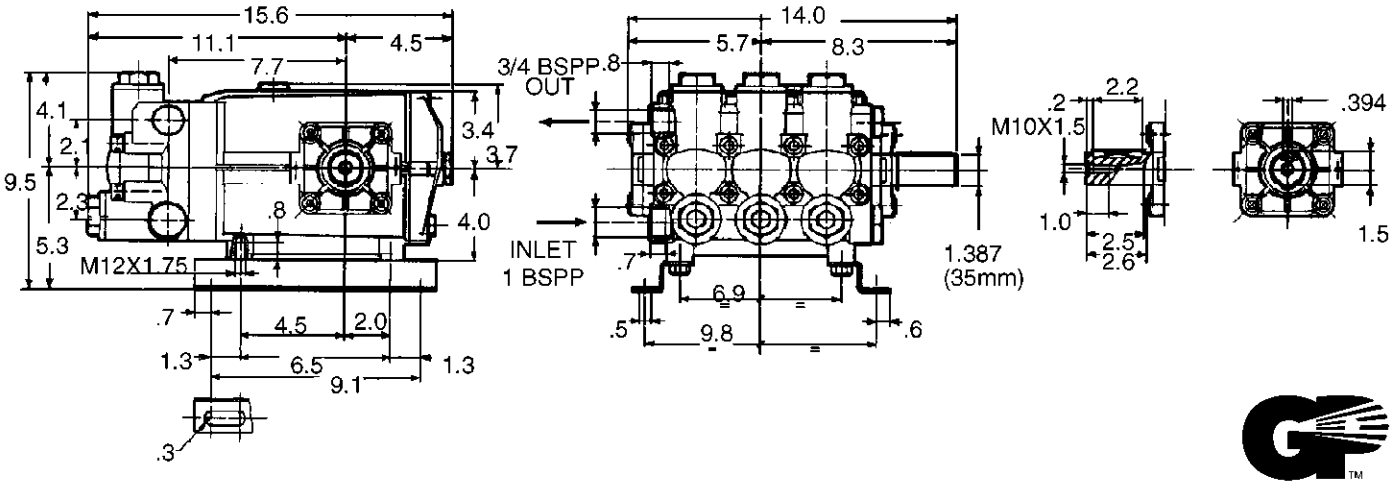

GENERAL PUMP

AT Series 76 – Triplex

GENERAL PUMP *A member of the Interpump Group*

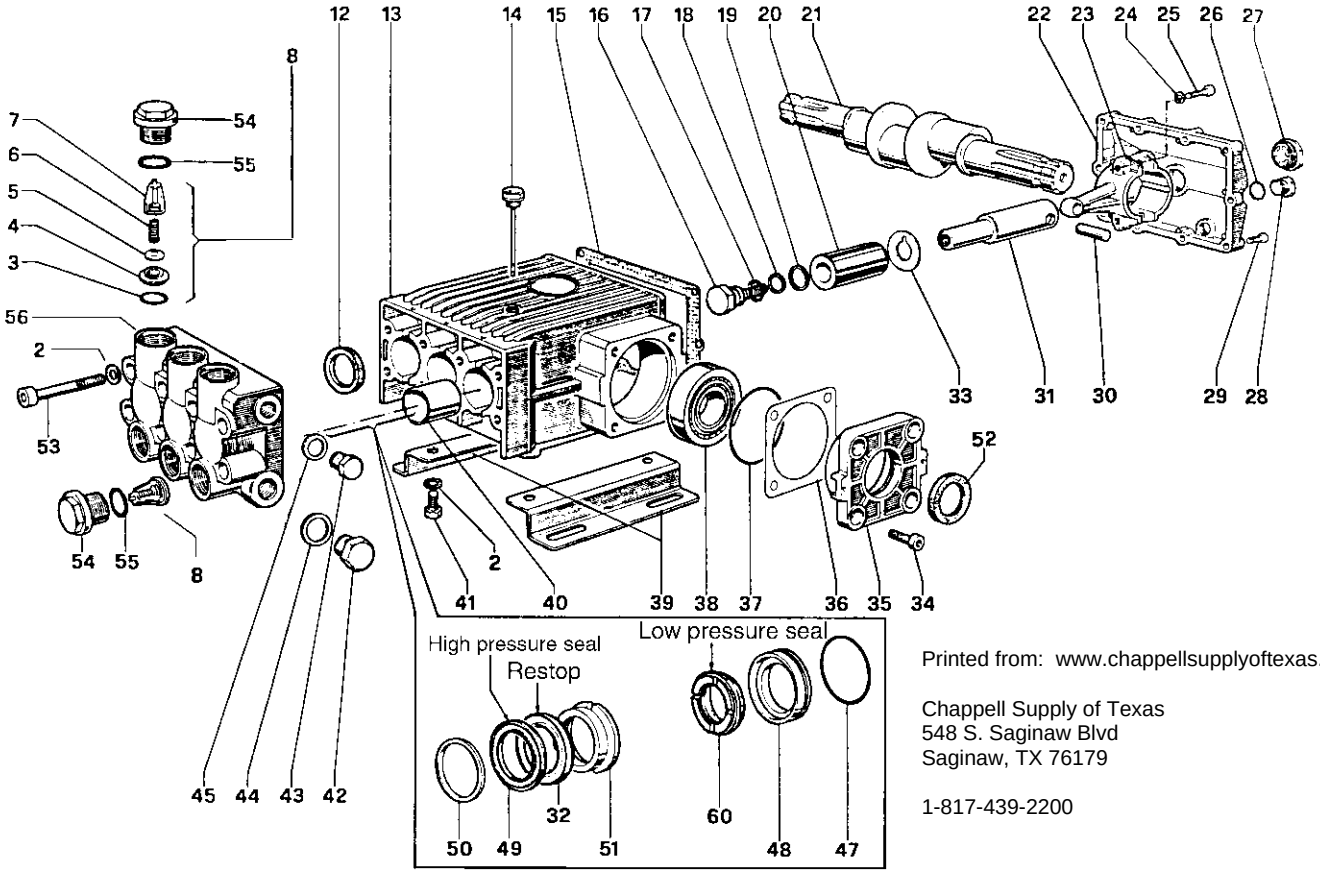

Printed from: www.chappellsupplyoftexas.com

Chappell Supply of Texas
548 S. Saginaw Blvd
Saginaw, TX 76179

1-817-439-2200

PARTS LIST

ITEM	PART NO.	DESCRIPTION	KIT	QTY.
2.	96.7195.00	Washer		12
3.	90.4059.00	O-Ring	43	6
4.	36.2011.66	Valve Seat	43	6
5.	36.2010.76	Valve	43	6
6.	94.7450.00	Spring	43	6
7.	36.2009.51	Valve Guide	43	6
8.	36.7065.01	Valve Unit	43	6
12.	90.1670.00	Oil Seal	44	3
13.	76.0100.22	Crankcase		1
14.	98.2270.00	Oil Dipstick		1
15.	76.2119.84	Gasket		1
16.	69.2195.66	Plunger Screw	74	3
17.	90.3841.00	O-Ring	74	3
18.	90.5107.00	Anti-Ext. Ring	74	3
19.	96.7555.00	Washer	74	3
20.	76.0402.09	Plunger (45 mm)		3
21.	76.0201.35	Shaft 1-3/8" ASAE splined dual		1
	76.0207.35	Shaft 1-3/8" ASAE x 35mm solid		

ITEM	PART NO.	DESCRIPTION	KIT	QTY.
22.	76.1600.22	Crankcase Cover		1
23.	76.0300.01	Connecting Rod		3
24.	96.7104.00	Washer		6
25.	99.3720.00	Screw		6
26.	90.3833.00	O-Ring		2
27.	97.5968.00	Oil Sight Guage		1
28.	98.2100.00	Cap Screw		2
29.	99.1897.00	Screw		10
30.	97.7400.00	Pin		3
31.	77.0500.22	Plunger Guide		3
32.	90.2848.00	Restop Ring	79,80,81	3
33.	96.7568.00	Washer		3
34.	99.3652.00	Screw		8
35.	76.1500.22	Cover		2
36.	76.2200.78	Shim		2
37.	90.4141.00	O-Ring		2
38.	91.8473.00	Bearing		2

ITEM	PART NO.	DESCRIPTION	KIT	QTY.
39.	76.2000.74	Foot		2
40.	90.9174.00	Bushing		3
41.	99.4266.00	Screw		4
42.	98.2325.00	Cap Screw		1
43.	98.2265.00	Cap Screw		1
44.	96.7870.00	Washer		1
45.	96.7700.00	Washer		1
47.	90.3903.00	O-Ring	47,80	3
48.	76.0802.70	Packing Retainer	47,80	3
49.	90.2850.00	Packing	79,80	3
50.	76.1002.51	Head Ring	48,80	3
51.	76.2170.70	Intermed. Ring	80,81	3
52.	90.1672.00	Oil Seal	32	2
53.	99.4418.00	Screw		8
54.	98.2420.00	Cap Screw		6
55.	90.4065.00	O-Ring		6
56.	76.1200.41	Brass Manifold		1
60.	90.2855.00	Seal, Low Press., 45mm	79,80	3

REPAIR KITS

KIT NO.	32	43	44	47	48	74	79	80	81
ITEM NO.s INCLUDED IN KIT	52	3, 4, 5, 6, 7 (8)	12	47, 48	50	16, 17, 18, 19	32, 49, 60	32, 47, 48, 49, 50, 51, 60	32, 51
NUMBER OF ASSEMBLIES IN KIT	2	6	3	3	6	3	3	1	3
NUMBER OF CYLINDERS KIT WILL SERVICE	-	3	3	3	3	3	3	1	3

TORQUE SPECS*

Position	Ft.-lbs.
1	51.5
11	51.5
16	29.4
25	29.4
27	13.2
28	29.4
29	7.3
34	29.4
41	51.5
42	73.7
43	51.5

*Decrease torque by 20% if threads are lubricated.

GENERAL PUMP 1174 NORTHLAND DRIVE • MENDOTA HEIGHTS, MN 55120
PHONE: (651)454-6500 • FAX: (651)454-4524 • e-mail: sales@generalpump.com • www.generalpump.com

300288 Rev. B
1-99

GENERAL PUMP