10213A

C

PROPRIETARY DATA

PROPERTY OF ACE ROTO-MOLD MFG., INC. INFORMATION FURNISHED HEREIN IS THE PROPERTY OF ACE ROTO-MOLD MFG., INC.AND SHALL NOT BE USED, DISCLOSED TO OTHERS, OR COPIED WITHOUT THE EXPRESSED WRITTEN CONSENT OF ACE ROTO-MOLD MFG., INC. ALL RIGHTS RESERVED.

DETAIL A

DIVIDER FILLER PANEL DETAILS

USE THIS FILLER PANEL TO FILL THE SERVICE SLOT IN THE DIVIDER PANEL.

DETAILS SHOWN ARE ACCORDING TO IAPMO SPECIFICATIONS.

SPECIFIC PORTING AND FITTINGS USED IN THIS PANEL FOR FLOW BETWEEN COMPARTMENTS MUST BE SUPPLIED BY INSTALLER AND SIZES VARIFIED ACCORDING TO YOUR LOCAL REQUIREMENTS IFDIFFERENT FROM IAPMO.

FASTEN PANEL ON INLET SIDE OF DIVIDER WITH #10 S.S. SHEET METAL SCREWS EVERY 3".

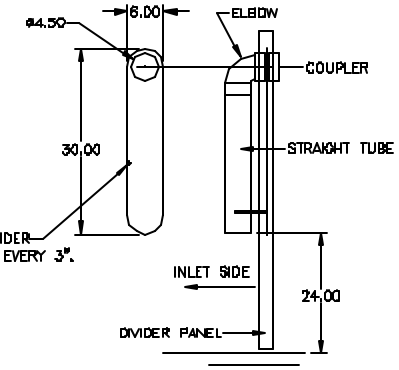

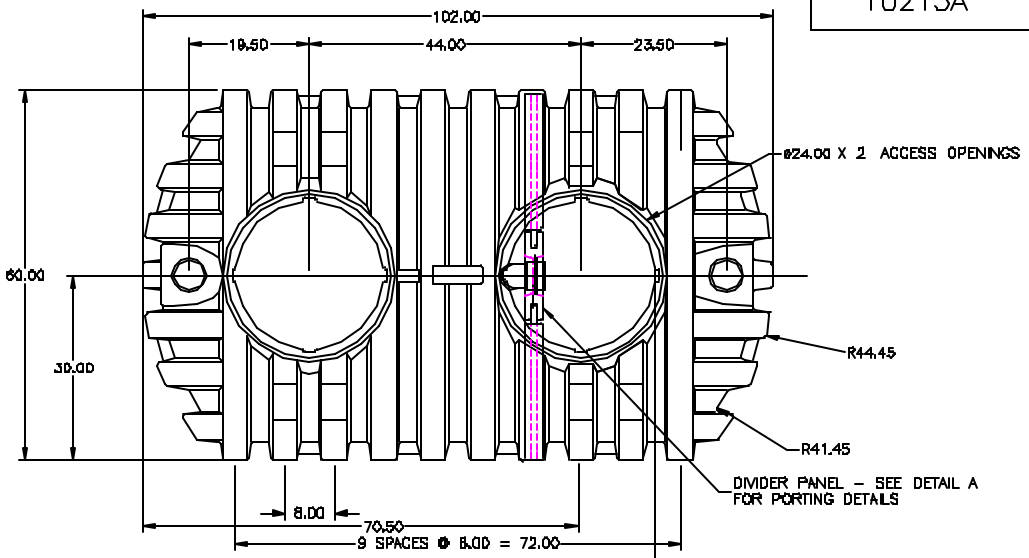

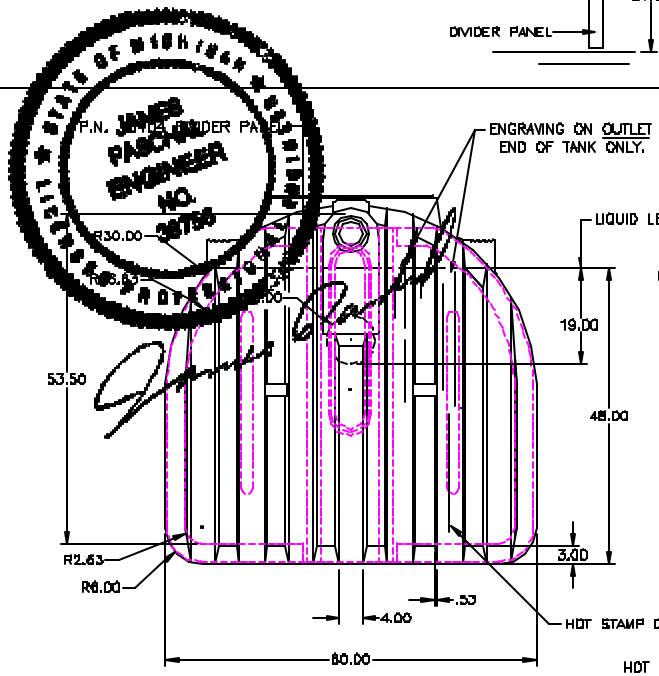

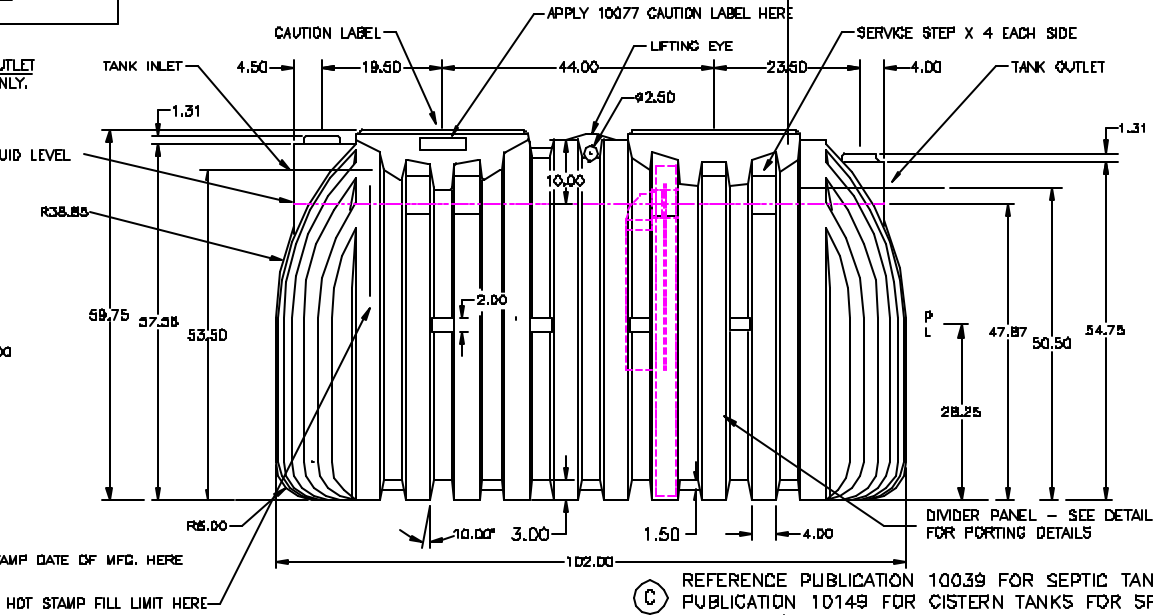

(C) REFERENCE PUBLICATION 10039 FOR SEPTIC TANKS OR PUBLICATION 10149 FOR CISTERN TANKS FOR SPECIFIC INSTALLATION GUIDELINES.

REV	DESCRIPTION	DATE	APPRD
C	ADDED PUBLICATION REF	9/30/05	
B	DIVIDER FTG. REVISION	4/26/99	
A	GENERAL REVISION	1/11/99	

DRAWN / DATE: REH / 11/1/97

APPRD. / DATE: REH / 11/1/97

MATERIAL: MOBIL 134 HDPE OR EQUIVELENT REFERENCE MATERIAL DATA SHEET FOR SPECIFIC PROPERTIES.

ALL DIMENSIONS ARE IN DECIMAL INCHES
TOLERANCES UNLESS OTHERWISE SPECIFIED
± .5% @ 68° F

THIRD ANGLE PROJECTION ANSI 14.5M

NOTES:
1. NOM. WALL @ .250
2. YELLOW COLOR
3. SHOT WEIGHT 330 LBS.

ACE ROTO-MOLD
A DIVISION OF DEN HARTOG INDUSTRIES, INC.
401B HWY. 60 BLVD., BOX 421, HOSPERS, IOWA 51238

CLIENT / DESCRIPTION: 1000 GAL. TWO COMPARTMENT SEPTIC TANK

SCALE: N.S.

PART NO. AST-1000-2